INSULDECK LOC-NAIL
SPECIFICATIONS

BASE SHEET TO TECTUM® WOOD FIBER ROOFDECKS

COMPOSITION

Fastener: Precision formed from coated steel. The 1.7" long dual shank with fine angular point easily penetrates Tectum® decks. The shank is self-clinching when driven.

Disk: Precision formed from coated steel, 2.7" diameter. Securely clamped to shank and rib reinforced to resist cupping when driven.

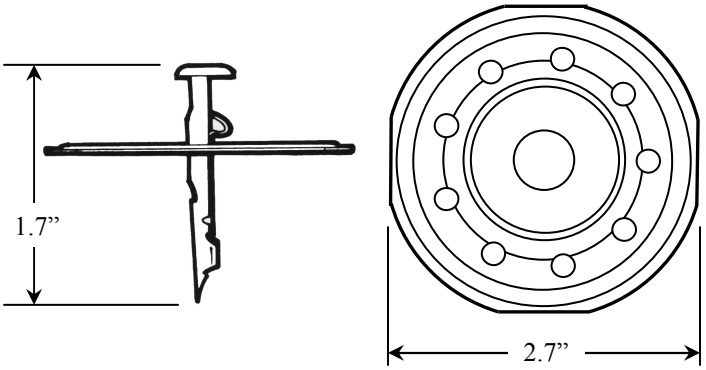

TECHNICAL DATA

Approvals: Insuldeck maintains Factory Mutual and Miami-Dade County Approvals.

Fastening Pattern: Consult Factory Mutual or Miami-Dade requirements for recommended pattern in normal, exposed, and hurricane areas.

Field Testing: On-site withdrawal testing should always be performed to evaluate the ability of the roofing substrate to satisfactorily accept and retain fasteners. Such testing may alter fastener selection and modify applicable fastening patterns.

INSTALLATION

Equipment: Always use the ES Products Insuldeck Driver. The specially designed driver assures consistent speedy application. ES Products Nail Pouch holds up to 10 times the quantity of fasteners accommodated by standard nailing aprons.

Method: Place fastener on face of driver. Driver self-centers fastener and holds fastener perpendicular to face. Drive fastener with vertical motion into roofdeck. DO NOT TOE.

Operation: When cupped head is driven flush against rigid cap, an automatic knee bend effect takes place in the shank of the fastener (see illustration), locking fastener in place. Uplift resistance may vary depending on the density and integrity of the substrate.

Availability: Insuldeck Loc-Nail is a proprietary product manufactured only by ES Products, Inc. and distributed by leading roofing material and equipment wholesalers throughout the United States.

Packaging: 1,000 Insuldeck Loc-Nails per carton. Gross weight: 27 lbs. Shrink wrapped and palletized.

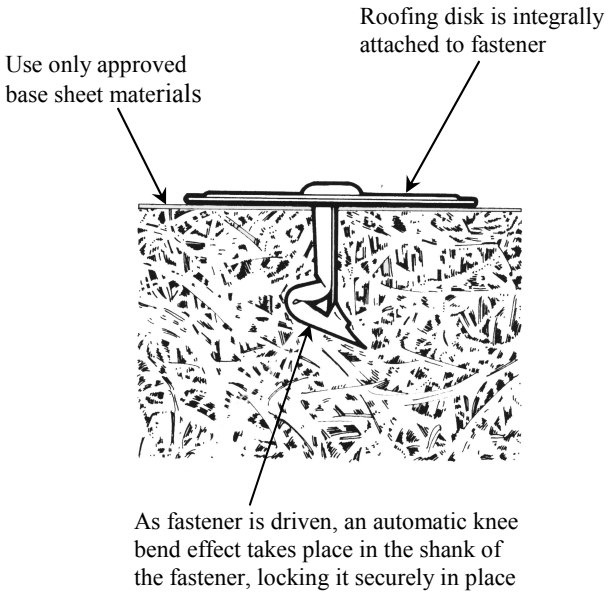

PROUDLY MADE IN THE U.S.A.

Warranty: ES Products, LLC warrants its products for one year from date of sale against defective workmanship and material, and its liability therefore shall be limited to replacing defective products reported defective during the warranty period. ES Products is not responsible for any failure attributable to improper use or installation in any manner inconsistent with manufacturer's specifications. THIS WARRANTY IS IN LIEU OF ANY OTHER WARRANTY, EXPRESS OR IMPLIED, ALL OF WHICH ARE EXPRESSLY DISCLAIMED INCLUDING ANY WARRANTY OF MERCHANTABILITY AND ANY WARRANTY OF FITNESS FOR PARTICULAR USE. This warranty provides specific legal rights and remedies that may vary from state to state.

FM APPROVED

MIAMI-DADE COUNTY APPROVED

ESPRODUCTS
280 Franklin Street • Bristol, RI 02809
800-493-ROOF (7663) • esproducts.com

BASE SHEET ATTACHMENT TO TECTUM® WOOD FIBER ROOFDECKS

USING THE INSULDECK LOC-NAIL

Fastener density and spacing vary depending on applicable uplift requirements. Local codes, governing approval bodies, membrane manufacturers, and individual roofdeck manufacturers all may have specific requirements that need to be addressed prior to beginning any roofing project. The following illustrates a typical Factory Mutual Approved fastening pattern widely accepted for use by membrane and roofdeck manufacturers.

FASTENING GUIDE I
CLASS I-90 WINDSTORM CLASSIFICATION

An FMRC-approved base sheet is secured to an FMRC-approved Tectum® roofdeck as outlined in the current edition of the FMRC Approval Guide and/or RoofNav.

The base sheet is secured with Insuldeck Loc-Nails installed 7.5" on center in 4" wide side laps and 7.5" on center, staggered in 2 rows, equally spaced, between the base sheet side laps.

When fastening meter-wide material with this pattern, expect to use approximately 165 fasteners per square (100 ft^2).

IMPORTANT:
Prior to roofing, on-site withdrawal testing should always be performed to evaluate the ability of the roofing substrate to satisfactorily accept and retain fasteners. Such testing may alter fastening selection and modify applicable fastening patterns.

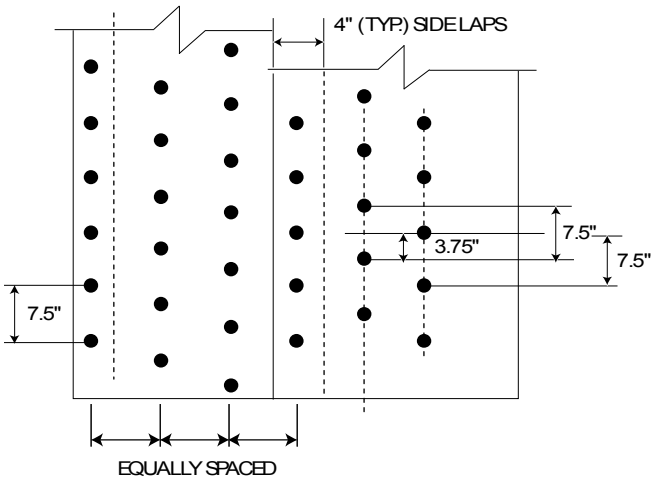

FASTENING GUIDE II
CLASS I-90 WINDSTORM CLASSIFICATION

An FMRC-approved base sheet is secured to an FMRC-approved Tectum® wood fiber roofdeck as outlined in the current edition of the FMRC Approval Guide and/or RoofNav.

The base sheet is secured with Insuldeck Loc-Nails installed 9" on center in 4" wide side laps and 12" on center, staggered in 2 rows, equally spaced, between the base sheet side laps.

When fastening meter-wide material with this pattern, expect to use approximately 114 fasteners per square (100 ft^2).

IMPORTANT:
Prior to roofing, on-site withdrawal testing should always be performed to evaluate the ability of the roofing substrate to satisfactorily accept and retain fasteners. Such testing may alter fastening selection and modify applicable fastening patterns.

Insuldeck Driver

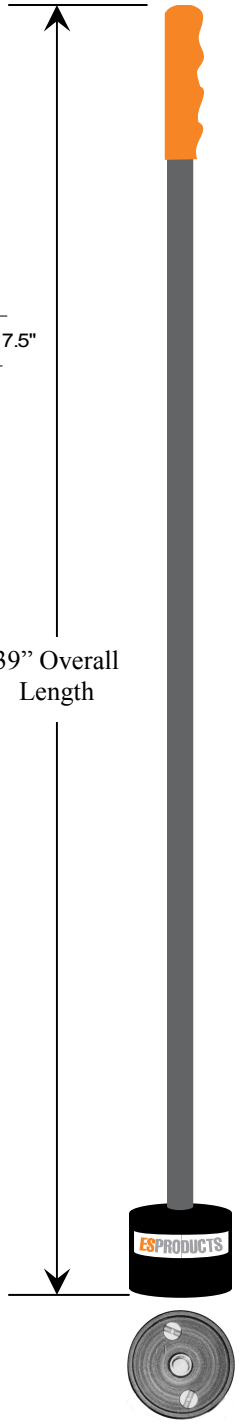

Face of Driver

ESPRODUCTS
280 Franklin Street • Bristol, RI 02809
800-493-ROOF (7663) • esproducts.com